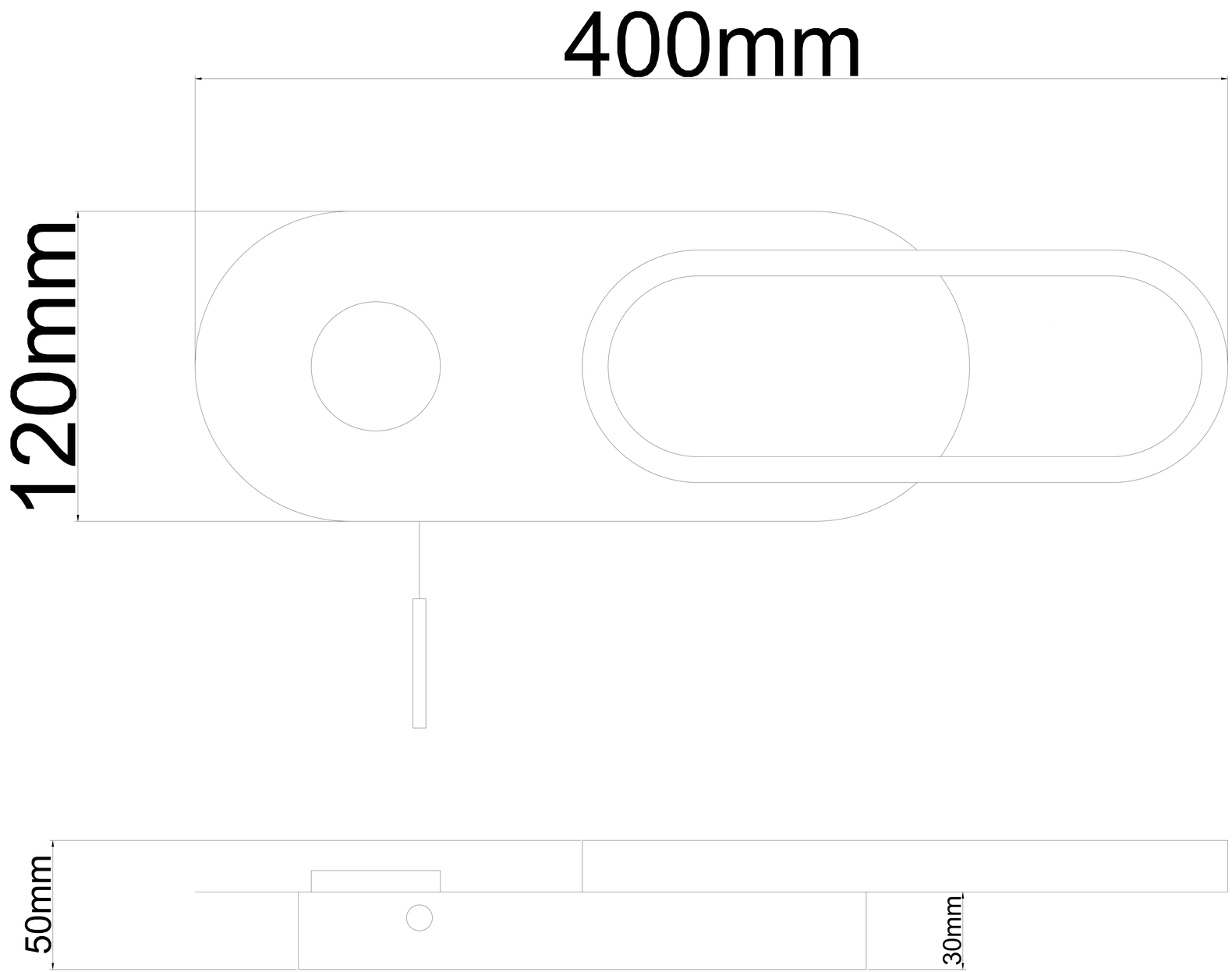
400mm
120mm
50mm
30mm