ARTE LAMP

ASSEMBLY INSTRUCTION
ИНСТРУКЦИЯ

A
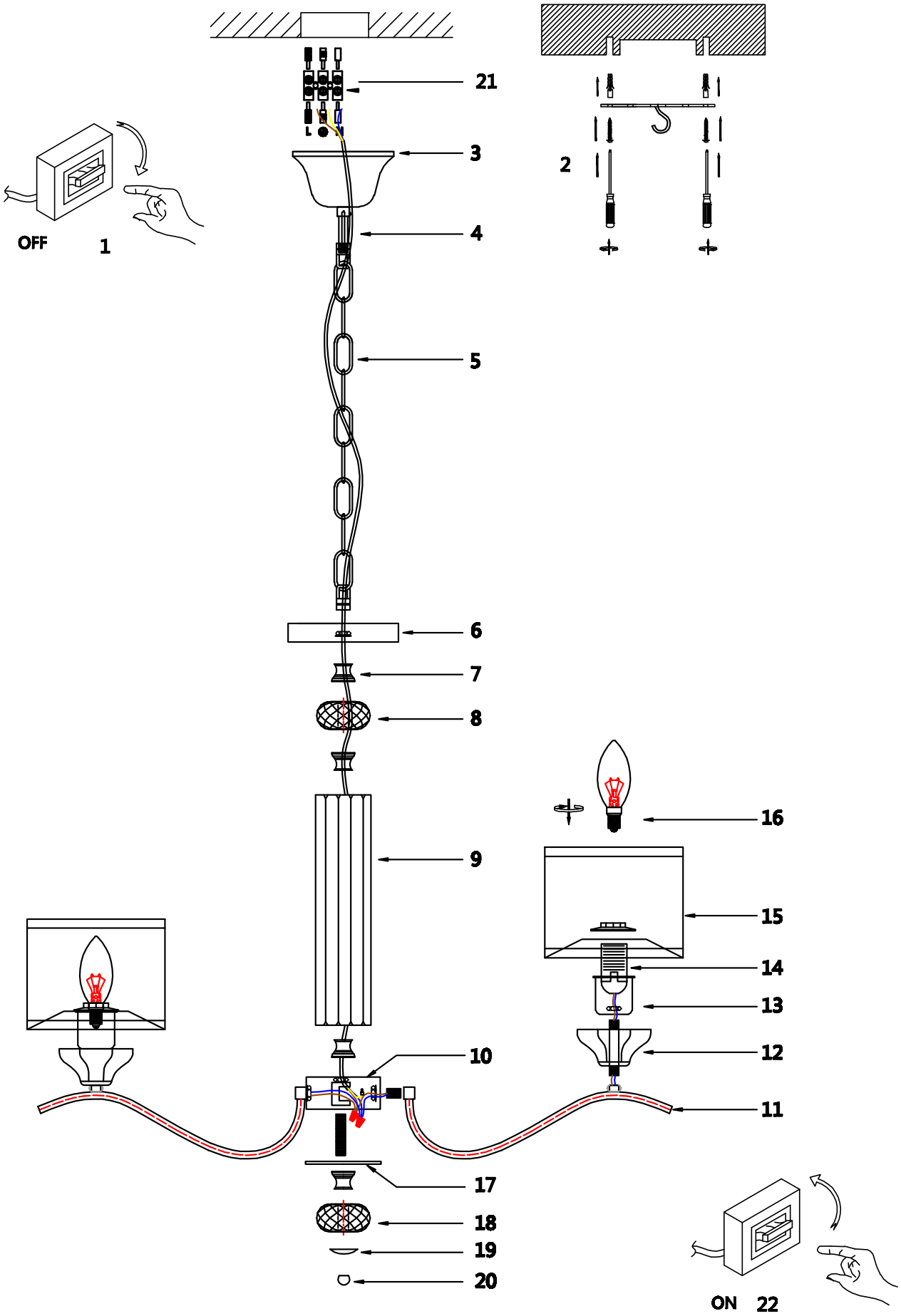
A4091LM-5CC
A4091LM-8CC